FIBER PROTECTION PEDESTAL

AR-FPP-L

INTRODUCTION

This equipment is used for FTTX system in the client wiring equipment, mainly used to protect the ground optical cable distribution box.
It is made of HDPE cover with dimension 289(D)*835(H)mm.
The green barrel contains one metal mounting bracket, fiber splitting box excluded.

PRODUCT STRUCTURE DIMENSION AND INSTALLATION

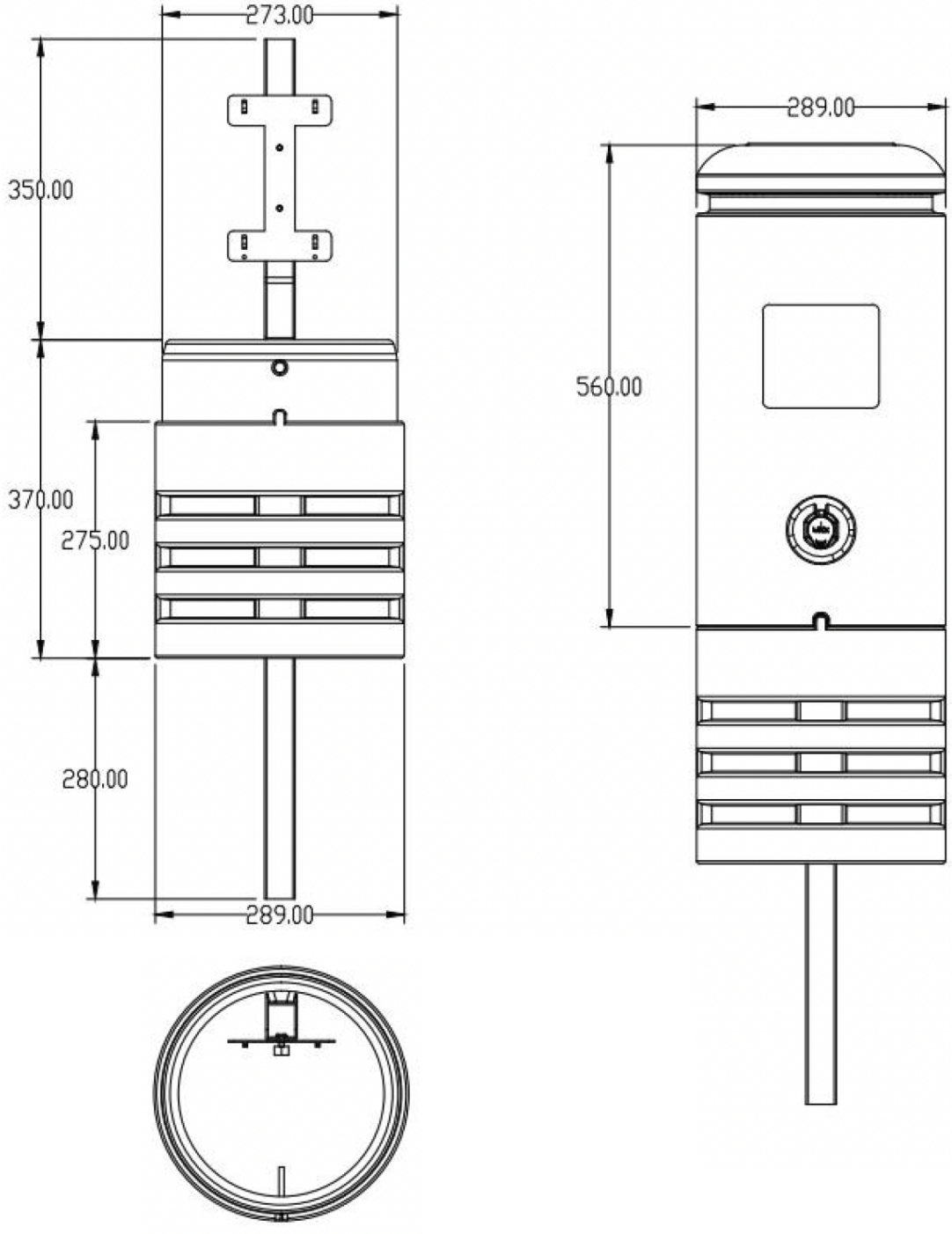

PRODUCT DIMENSIONS AND STRUCTURE ARE SHOWN IN THE FIGURE ABOVE

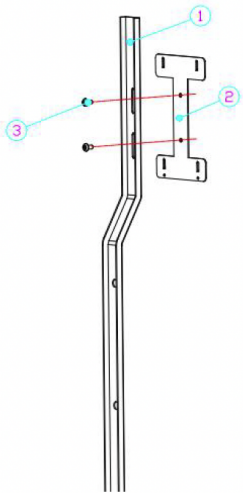

Step 1: Above picture, connecting (1) pedestal box's installation bracket A and (2)distribution box's bracket B though 3M6*10 Cross head scresw.

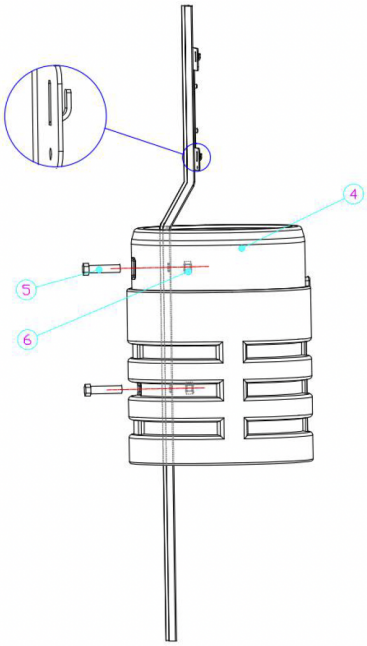

Step 2: Fix the accessories we installed well in last step on the base of pedestal box though 5M12*50 hexagonal screw and 6M12 hexagon nut.

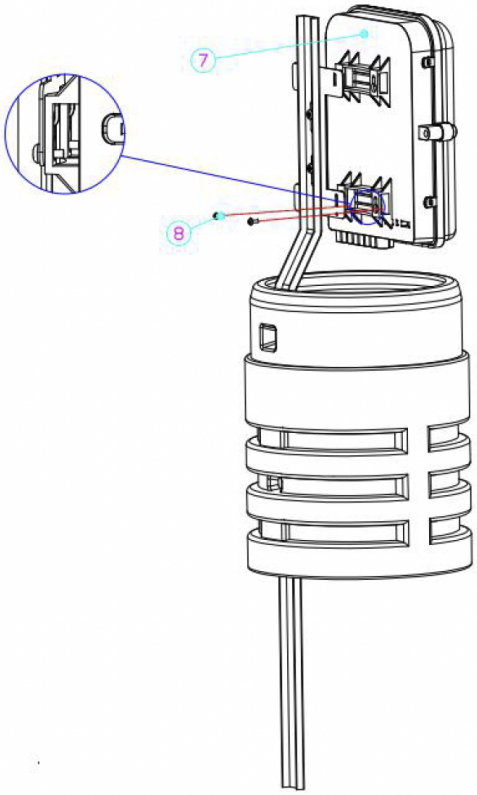

Step 3: Install the distribution box(7) on the bracket of pedestal box though 8M4*6 Cross head screw.

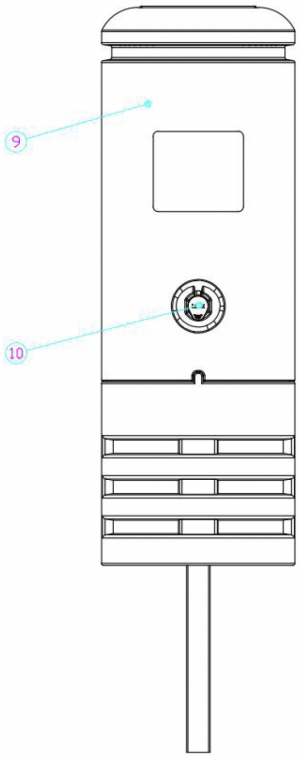

Step 4: Install the tube (9) shell and lock it (10).

INSTALLATION ON GROUND

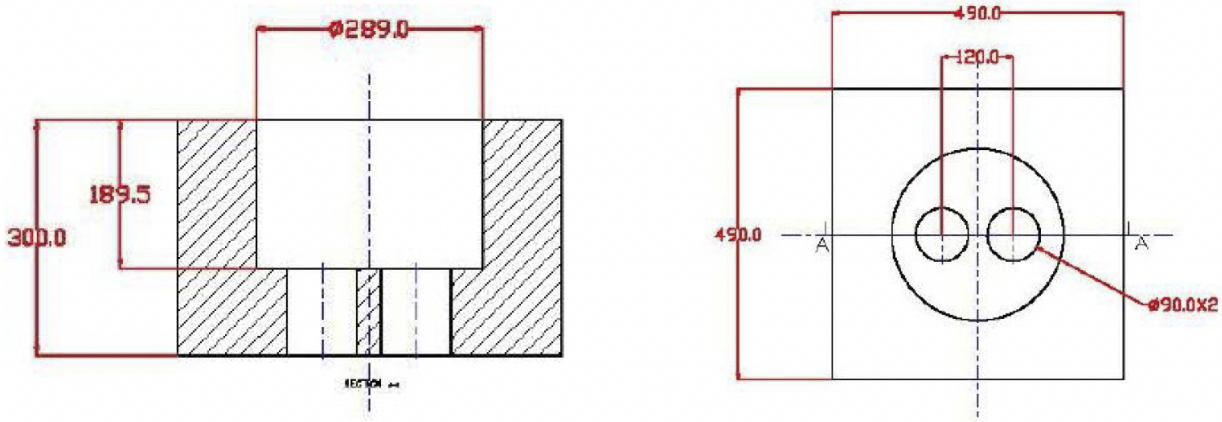

Make foundation holes in the ground concrete according to the dimensions shown above.

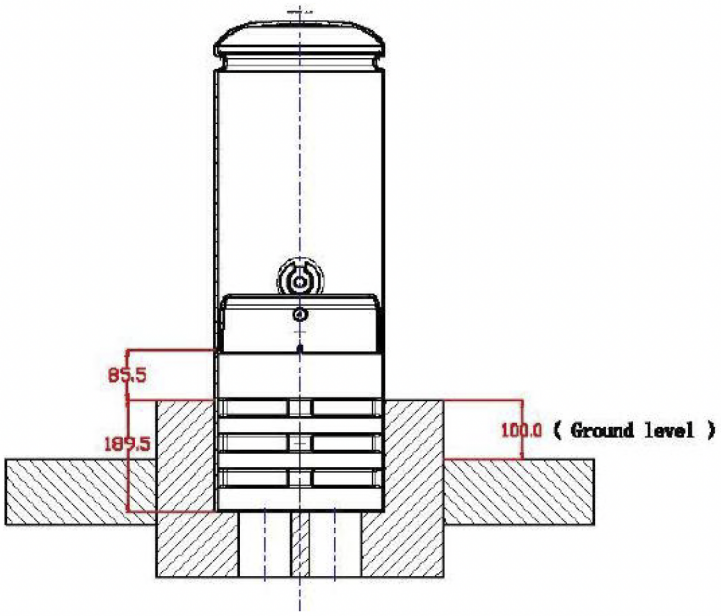

Pour the barrel on the ground with concrete as shown in the picture.